Product Information Section

Model Views

C2590436

Model View Illustrations

The following model views show typical features of the 400 series engines. Due to individual applications, your engine may appear different from the illustrations.

Note: Individual components are detailed on the 404D-22T turbocharged engine only.

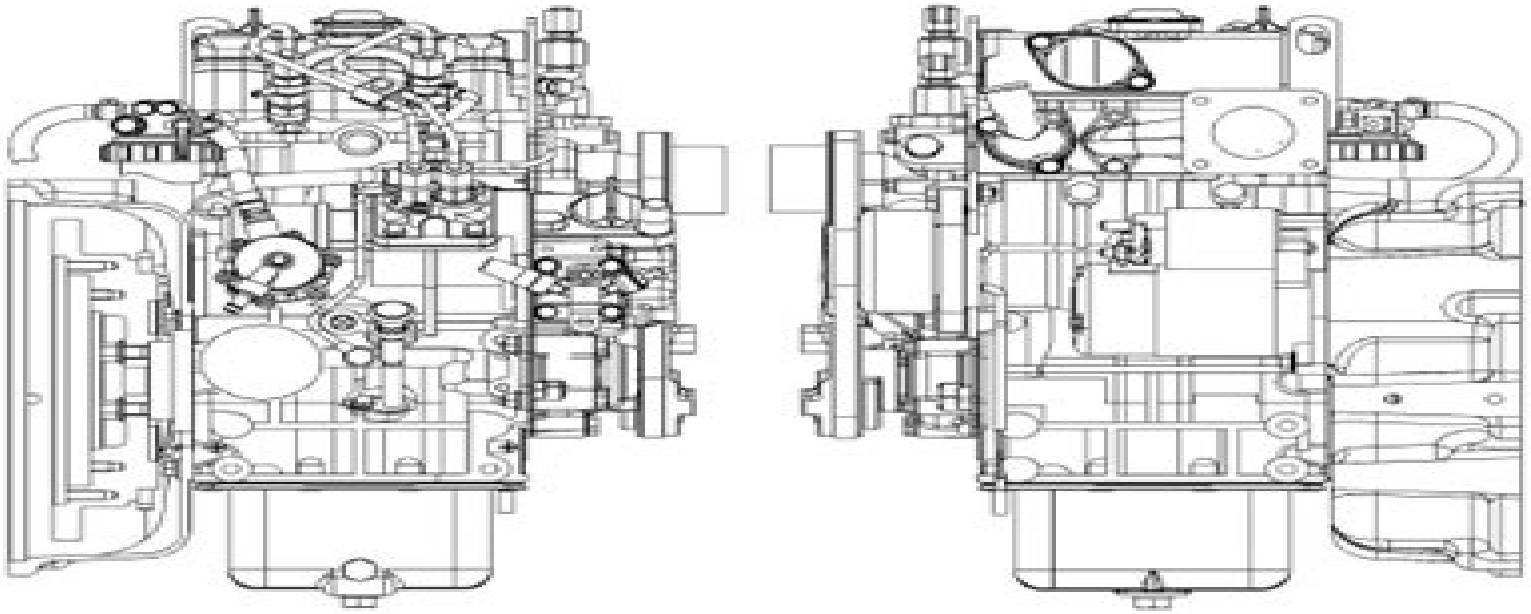

Illustration 9
Typical view of the 402D-05 engine

g01299965

www.epcatalogs.com

Parts Manuals Perkins 403d

Cockshutt Farm Equipment,Brantford (Ont.)

Parts Manuals Perkins 403d:

The Bookseller ,1957 Vols for 1871 76 1913 14 include an extra number The Christmas bookseller separately paged and not included in the consecutive numbering of the regular series Parts Book 4.108. Perkins Diesel Motor Ibérica División Perkins,1972 **Perkins V8.510** ,1969 **Master Parts Manual** Tecumseh Products Company. Engine and Gear Service Division,1982 **Lauson-Power Products Master Parts Manual** Tecumseh Products Company,1961 **Domestic Labor Guide and Parts Manual, 1989-93** Chilton Automotive Books,Chilton Automotive Editorial Staff,1992-11-01 **Domestic Labor Guide and Parts Manual, 1992-96** Chilton Automotive Books,Chilton Automotive Editorial Staff,1995-01-01

Operating and Maintenance Manuals, Warranties, and Parts Lists Auto Electric Service Company,Briggs & Stratton Corporation,Milwaukee (Wis.),1950 *Parts Catalogs, Service Manuals and Parts Book; Loaders, Nos. 89, 126 and 156* Oliver Corporation,Shelbyville (Ill.),1959 Chilton's 1995 Labor Guide and Parts Manual Kerry A. Freeman,1994-11-01

Willys Industrial Engine Manual and Parts List Willys Motors, Inc,1959* **Instructions and Parts Catalog** Atlas Imperial Diesel Engine Co, **Chilton's Labor Guide and Parts Manual** ,1974 Master Replacement Parts Service Manual Auto Parts Company,1922 Motor's Flat Rate and Parts Manual. 41st Edition L. C. Forier (ed),1969 **Parts Catalogs and Instructions Manuals, Loaders, 59-A, 1210, 1510, 1610, 1810** Cockshutt Farm Equipment,Brantford (Ont.),1964 **Buick Auto Parts Interchange Manual 1935-1952** F. D. Harper,2012-02-20 The part interchange manual can be used to look up NOS part numbers It includes approximately 3000 parts descriptions with factory part numbers by make model and year for Buick Chevrolet Pontiac and Oldsmobile parts by year make and model that are interchangeable For example you can also determine if different years of Pontiac used the same part or as a parts manual for your car Covers engine parts body parts electrical parts suspension parts clutches transmission rear ends steering and more There are even some parts listed for the early 1930 s For convenience the parts are listed in sequence by group number Model application or interchangeable parts for each car line is shown under the respective columns Anyone looking for or selling parts attending swap meets or restoring an antique auto will be able to put this information to good use *Instruction Manual, Operation and Maintenance and Service Parts Lists* Hercules Motors Corporation,1944* *Chilton's Motor/age Professional Labor Guide and Parts Manual* , *Motor's Flat Rate & Parts Manual* ,1955

If you ally need such a referred **Parts Manuals Perkins 403d** books that will meet the expense of you worth, acquire the utterly best seller from us currently from several preferred authors. If you desire to humorous books, lots of novels, tale, jokes, and more fictions collections are as a consequence launched, from best seller to one of the most current released.

You may not be perplexed to enjoy all book collections Parts Manuals Perkins 403d that we will unquestionably offer. It is not in this area the costs. Its approximately what you dependence currently. This Parts Manuals Perkins 403d, as one of the most operational sellers here will definitely be among the best options to review.

https://correiodobrasil.blogoosfero.cc/results/Resources/index.jsp/Missed_Opportunities_And_Other_Stories.pdf

Table of Contents Parts Manuals Perkins 403d

1. Understanding the eBook Parts Manuals Perkins 403d
    - The Rise of Digital Reading Parts Manuals Perkins 403d
    - Advantages of eBooks Over Traditional Books
2. Identifying Parts Manuals Perkins 403d
    - Exploring Different Genres
    - Considering Fiction vs. Non-Fiction
    - Determining Your Reading Goals
3. Choosing the Right eBook Platform
    - Popular eBook Platforms
    - Features to Look for in an Parts Manuals Perkins 403d
    - User-Friendly Interface
4. Exploring eBook Recommendations from Parts Manuals Perkins 403d
    - Personalized Recommendations
    - Parts Manuals Perkins 403d User Reviews and Ratings
    - Parts Manuals Perkins 403d and Bestseller Lists
5. Accessing Parts Manuals Perkins 403d Free and Paid eBooks

- Parts Manuals Perkins 403d Public Domain eBooks
- Parts Manuals Perkins 403d eBook Subscription Services
- Parts Manuals Perkins 403d Budget-Friendly Options

6. Navigating Parts Manuals Perkins 403d eBook Formats
   - ePub, PDF, MOBI, and More
   - Parts Manuals Perkins 403d Compatibility with Devices
   - Parts Manuals Perkins 403d Enhanced eBook Features
7. Enhancing Your Reading Experience
   - Adjustable Fonts and Text Sizes of Parts Manuals Perkins 403d
   - Highlighting and Note-Taking Parts Manuals Perkins 403d
   - Interactive Elements Parts Manuals Perkins 403d
8. Staying Engaged with Parts Manuals Perkins 403d
   - Joining Online Reading Communities
   - Participating in Virtual Book Clubs
   - Following Authors and Publishers Parts Manuals Perkins 403d
9. Balancing eBooks and Physical Books Parts Manuals Perkins 403d
   - Benefits of a Digital Library
   - Creating a Diverse Reading Collection Parts Manuals Perkins 403d
10. Overcoming Reading Challenges
    - Dealing with Digital Eye Strain
    - Minimizing Distractions
    - Managing Screen Time
11. Cultivating a Reading Routine Parts Manuals Perkins 403d
    - Setting Reading Goals Parts Manuals Perkins 403d
    - Carving Out Dedicated Reading Time
12. Sourcing Reliable Information of Parts Manuals Perkins 403d
    - Fact-Checking eBook Content of Parts Manuals Perkins 403d
    - Distinguishing Credible Sources
13. Promoting Lifelong Learning
    - Utilizing eBooks for Skill Development

- Exploring Educational eBooks

14. Embracing eBook Trends
    - Integration of Multimedia Elements
    - Interactive and Gamified eBooks

Parts Manuals Perkins 403d Introduction

In the digital age, access to information has become easier than ever before. The ability to download Parts Manuals Perkins 403d has revolutionized the way we consume written content. Whether you are a student looking for course material, an avid reader searching for your next favorite book, or a professional seeking research papers, the option to download Parts Manuals Perkins 403d has opened up a world of possibilities. Downloading Parts Manuals Perkins 403d provides numerous advantages over physical copies of books and documents. Firstly, it is incredibly convenient. Gone are the days of carrying around heavy textbooks or bulky folders filled with papers. With the click of a button, you can gain immediate access to valuable resources on any device. This convenience allows for efficient studying, researching, and reading on the go. Moreover, the cost-effective nature of downloading Parts Manuals Perkins 403d has democratized knowledge. Traditional books and academic journals can be expensive, making it difficult for individuals with limited financial resources to access information. By offering free PDF downloads, publishers and authors are enabling a wider audience to benefit from their work. This inclusivity promotes equal opportunities for learning and personal growth. There are numerous websites and platforms where individuals can download Parts Manuals Perkins 403d. These websites range from academic databases offering research papers and journals to online libraries with an expansive collection of books from various genres. Many authors and publishers also upload their work to specific websites, granting readers access to their content without any charge. These platforms not only provide access to existing literature but also serve as an excellent platform for undiscovered authors to share their work with the world. However, it is essential to be cautious while downloading Parts Manuals Perkins 403d. Some websites may offer pirated or illegally obtained copies of copyrighted material. Engaging in such activities not only violates copyright laws but also undermines the efforts of authors, publishers, and researchers. To ensure ethical downloading, it is advisable to utilize reputable websites that prioritize the legal distribution of content. When downloading Parts Manuals Perkins 403d, users should also consider the potential security risks associated with online platforms. Malicious actors may exploit vulnerabilities in unprotected websites to distribute malware or steal personal information. To protect themselves, individuals should ensure their devices have reliable antivirus software installed and validate the legitimacy of the websites they are downloading from. In conclusion, the ability to download Parts Manuals Perkins 403d has transformed the way we access information. With the convenience, cost-effectiveness, and accessibility it

offers, free PDF downloads have become a popular choice for students, researchers, and book lovers worldwide. However, it is crucial to engage in ethical downloading practices and prioritize personal security when utilizing online platforms. By doing so, individuals can make the most of the vast array of free PDF resources available and embark on a journey of continuous learning and intellectual growth.

FAQs About Parts Manuals Perkins 403d Books

1. Where can I buy Parts Manuals Perkins 403d books? Bookstores: Physical bookstores like Barnes & Noble, Waterstones, and independent local stores. Online Retailers: Amazon, Book Depository, and various online bookstores offer a wide range of books in physical and digital formats.
2. What are the different book formats available? Hardcover: Sturdy and durable, usually more expensive. Paperback: Cheaper, lighter, and more portable than hardcovers. E-books: Digital books available for e-readers like Kindle or software like Apple Books, Kindle, and Google Play Books.
3. How do I choose a Parts Manuals Perkins 403d book to read? Genres: Consider the genre you enjoy (fiction, non-fiction, mystery, sci-fi, etc.). Recommendations: Ask friends, join book clubs, or explore online reviews and recommendations. Author: If you like a particular author, you might enjoy more of their work.
4. How do I take care of Parts Manuals Perkins 403d books? Storage: Keep them away from direct sunlight and in a dry environment. Handling: Avoid folding pages, use bookmarks, and handle them with clean hands. Cleaning: Gently dust the covers and pages occasionally.
5. Can I borrow books without buying them? Public Libraries: Local libraries offer a wide range of books for borrowing. Book Swaps: Community book exchanges or online platforms where people exchange books.
6. How can I track my reading progress or manage my book collection? Book Tracking Apps: Goodreads, LibraryThing, and Book Catalogue are popular apps for tracking your reading progress and managing book collections. Spreadsheets: You can create your own spreadsheet to track books read, ratings, and other details.
7. What are Parts Manuals Perkins 403d audiobooks, and where can I find them? Audiobooks: Audio recordings of books, perfect for listening while commuting or multitasking. Platforms: Audible, LibriVox, and Google Play Books offer a wide selection of audiobooks.
8. How do I support authors or the book industry? Buy Books: Purchase books from authors or independent bookstores. Reviews: Leave reviews on platforms like Goodreads or Amazon. Promotion: Share your favorite books on social media

or recommend them to friends.

9. Are there book clubs or reading communities I can join? Local Clubs: Check for local book clubs in libraries or community centers. Online Communities: Platforms like Goodreads have virtual book clubs and discussion groups.
10. Can I read Parts Manuals Perkins 403d books for free? Public Domain Books: Many classic books are available for free as theyre in the public domain. Free E-books: Some websites offer free e-books legally, like Project Gutenberg or Open Library.

Find Parts Manuals Perkins 403d :

missed opportunities and other stories
~~mission paris a scavenger hunt adventure travel book for kids~~
mining the web worksheet answers
mirror project spiegelbilder wandkalender monatskalender
misc tractors hydra mac 20c v gas skid steer parts manual
mis menus de cada dia sabores
~~misc tractors yanmar f16d service manual~~
mis mejores historias de 5 minutos sam el bombero
miss minerva and william green hill
~~mit dem anzug rucksack gegens tze~~
~~mitsubishi 6g7 series engine full service repair manual 2002 onwards~~
mistletoe at manger charleeda sprinkle
minn kota riptide 24v manual
mir von dschinnistan karl may ebook
~~mistakes worth making how to turn sports errors into athletic excellence~~

Parts Manuals Perkins 403d :

learning to teach richard arends google books - Nov 27 2022
web the scientific basis for the art of teaching student learning in diverse classrooms the leadership aspects of teaching teacher planning learning communities and student
is this an appropriate use of ai or not teachers say classrooms - Oct 15 2021

learning to teach information center mcgraw hill education - Jun 03 2023
web this best selling text provides comprehensive coverage of general teaching methods and models the most balanced text in its field learning to teach strikes a harmony by

learning to teach worldcat org - Feb 28 2023
web jan 1 2015 learning to teach 10th edition richard i arends 9781260781434 amazon com books currently unavailable we don t know when or if this item will be

learning to teach 10th edition by richard arends isbn 13 978 - Apr 01 2023
web this best selling text provides comprehensive coverage of general teaching methods and models the most balanced text in its field learning to teach strikes a harmony by

learning to teach 10th edition amazon com - Dec 29 2022
web 1 volume various pagings 26 cm now in its sixth edition richard arends s highly regarded text provides comprehensive coverage of general teaching methods and

learning to teach arends richard free download borrow - Oct 27 2022
web download learning to teach pdf

learning to teach 10th edition amazon com - Oct 07 2023
web this best selling text provides comprehensive coverage of general teaching methods and models the most balanced text in its field learning to teach strikes a harmony by

learning to teach 10th ed international ed odtuden com tr - Aug 05 2023
web the most balanced resource in its field learning to teach helps future teachers master both the theory and application of successful teaching the text provides strong

learning to teach arends richard free download borrow - Sep 25 2022
web apr 14 2014 coupon rent learning to teach 10th edition by arends ebook 9780073517568 and save up to 80 on online textbooks at chegg com now

download learning to teach by arends richard - Jul 24 2022
web learning to teach 10th 10e richard arends author s richard i arends edition 10 year 2015 isbn 13 9780078110306 978 0 07 811030 6 isbn 10 0078110300

learning to teach rent 9780073517568 chegg com - Jun 22 2022
web this best selling text provides comprehensive coverage of general teaching methods and models the most balanced text in its field learning to teach strikes a harmony by

learning to teach 10th edition pdf peatix - Jan 18 2022

web oct 31 2023 a 2021 review of 10 studies on pandemic learning loss published by the uk s department for education found that disadvantaged primary school students were

learning to teach edition 10th isbn 9780078110306 - May 22 2022

web find step by step solutions and answers to learning to teach 9780078110306 as well as thousands of textbooks so you can move forward with confidence

minecraft education official app in the microsoft store - Nov 15 2021

web feb 26 2014 the most balanced text in its field learning to teach strikes a harmony by integrating research based practices with practical consideration and opportunity for real

learning to teach richard arends google books - Sep 06 2023

web orta ÖĞretİm fen ve matematİk ÖĞretmenlİĞİ bölümünde kaynak olarak kullanılan learning to teach 10th ed international ed 9781259254253 kitabını

learning to teach 10th edition 9780078110306 textbooks com - Jan 30 2023

web oct 31 2008 learning to teach richard arends mcgraw hill companies incorporated oct 31 2008 education 608 pages this best selling text provides comprehensive

isbn 9780078110306 learning to teach 10th - Jul 04 2023

web learning to teach richard arends mcgraw hill 1994 ability academic learning activities advance organizer allocated analysis and reflection approach asked aspects

richard arends learning to teach bookfi org - Aug 25 2022

web learning to teach spend 50 to get a free movie details view larger show international cover isbn 10 0078110300 isbn 13 9780078110306 edition 10th 2015 authors

learning to teach 10th 10e richard arends pdf ebook download - Apr 20 2022

web learning to teach 10th edition by richard arends author 4 ideal for anyone studying education or involved in a site based teacher education program the book focuses on

1805 03643 learning to teach arxiv org - Dec 17 2021

web 1 day ago the growing republican battle over war funding the new york times the daily november 7 2023 25 37 the growing republican battle over war funding

amazon com learning to teach ebook arends kindle store - Aug 13 2021

learning to teach 10th edition softarchive - Mar 20 2022

web may 9 2018 1805 03643 learning to teach computer science machine learning submitted on 9 may 2018 learning to

teach yang fan fei tian tao qin xiang yang
the growing republican battle over war funding - Sep 13 2021

learning to teach richard arends google books - May 02 2023
web edition tenth edition mcgraw hill international edition view all formats and editions
learning to teach 10th edition solutions and answers quizlet - Feb 16 2022
web oct 11 2017 this app is for school and organizational use minecraft education is a game based platform that inspires creative inclusive learning through
digital video and hd algorithms and interfaces the morgan - Apr 03 2023
web feb 7 2012 digital video and hdtv algorithms and interfaces covers the theory and engineering of digital video systems in a manner that is equally accessible to video engineers and computer graphics practitioners it provides succinct and accurate treatment of standard definition television sdtv high definition television hdtv and
digital video and hdtv algorithms and interfaces - Jul 26 2022
web feb 27 2012 with the help of hundreds of high quality technical illustrations this book presents the following topics basic concepts of digitization sampling quantization gamma and filtering principles of color science as applied to image capture and display scanning and coding of sdtv and hdtv video color coding luma chroma 4 2 2 component
digital video and hd 1st edition elsevier - Mar 02 2023
web dec 16 2002 digital video and hd algorithms and interfaces 1st edition december 16 2002 author charles poynton ebook isbn 9780080504308 purchase options limited offer save 50 on book bundles immediately download your ebook while waiting for your print delivery no promo code is needed offer details description
digital video and hd algorithms and interfaces e kitap - Nov 29 2022
web bir poynton charles eseri olan digital video and hd algorithms and interfaces e kitap olarak en cazip fiyat ile d r de keşfetmek için hemen tıklayınız
digital video and hd 2nd edition elsevier - Aug 07 2023
web jan 24 2012 digital video and hd algorithms and interfaces provides a one stop shop for the theory and engineering of digital video systems equally accessible to video engineers and those working in computer graphics charles poynton s revision to his classic text covers emergent compression systems including h 264 and vp8 webm and
digital video and hd algorithms and interfaces second edition - Feb 18 2022
web mar 4 2016 digital video and hd algorithms and interfaces second edition the book by charles poynton 2012 digital video and hd algorithms and interfaces second edition burlington mass elsevier morgan kaufmann is now commercially

available the table of contentsis available

digital video and hd algorithms and interfaces 2nd ed - Mar 22 2022

web feb 7 2012 digital video and hd collection opensource language english pdf addeddate 2022 10 28 09 37 52 identifier digital video and hd algorithms and interfaces 2nd ed poynton 2012 02 07 identifier ark ark 13960 s2tkwp4bknf ocr tesseract 5 2 0 1 gc42a ocr detected lang en ocr detected lang conf 1 0000

digital video and hd algorithms and interfaces google books - Jul 06 2023

web feb 27 2012 digital video and hd algorithms and interfaces provides a one stop shop for the theory and engineering of digital video systems equally accessible to video engineers and those working in

digital video and hdtv algorithms and interfaces guide books - Jun 24 2022

web digital video and hdtv algorithms and interfaces computing methodologies artificial intelligence computer vision computer vision problems video segmentation computer vision tasks video summarization image and video acquisition computer graphics image compression rendering recommendations

digital video and hd on apple books - Apr 22 2022

web feb 27 2012 digital video and hd algorithms and interfaces provides a one stop shop for the theory and engineering of digital video systems equally accessible to video engineers and those working in computer graphics charles poynton s revision to his classic text covers emergent compression systems i

digital video and hd algorithms and interfaces the morgan - Sep 27 2022

web digital video and hd algorithms and interfaces the morgan kaufmann series in computer graphics poynton charles amazon com tr kitap

digital video and hd algorithms and interfaces guide books - Sep 08 2023

web abstract digital video and hd algorithms and interfaces provides a one stop shop for the theory and engineering of digital video systems equally accessible to video engineers and those working in computer graphics charles poyntons revision to his classic text covers emergent compression systems including h 264 and vp8webm and augments

digital video and hdtv algorithms and interfaces the morgan - May 24 2022

web jan 3 2003 digital video and hd algorithms and interfaces the morgan kaufmann series in computer graphics 55 00 20 only 5 left in stock more on the way rapidly evolving computer and communications technologies have achieved data transmission rates and data storage capacities high enough for digital video

digital video and hd algorithms and interfaces - Oct 29 2022

web digital video and hd algorithms and interfaces yazar poynton charles isbn 9780123919328 yazar ek girişi poynton charles perceptual uniformity colour luma and colour difference components digital image representation sd and hd square

Parts Manuals Perkins 403d

sampling comparison of aspect ratios aspect ratio frame rates 2 image

digital video and hdtv algorithms and interfaces guide books - Dec 31 2022

web jan 1 2003 with the help of hundreds of high quality technical illustrations this book presents the following topics basic concepts of digitization sampling quantization gamma and filtering principles of color science as applied to image capture and display scanning and coding of sdtv and hdtv video color coding luma chroma 4 2 2 component

digital video and hd algorithms and interfaces the morgan - Aug 27 2022

web digital video and hdtv algorithms and interfaces covers the theory and engineering of digital video systems in a manner that is equally accessible to video engineers and computer graphics practitioners it provides succinct and accurate treatment of standard definition television sdtv high definition television hdtv and compression systems

digital video and hd algorithms and interfaces worldcat org - Feb 01 2023

web digital video and hd algorithms and interfaces author charles a poynton summary this book provides a one stop shop for the theory and engineering of digital video systems

digital video and hd sciencedirect - Oct 09 2023

web digital video and hd algorithms and interfaces provides a one stop shop for the theory and engineering of digital video systems equally accessible to video engineers and those working in computer graphics charles poynton s revision to his classic text covers emergent compression systems including h 264 and vp8 webm and augments detailed

digital video and hd algorithms and interfaces google books - Jun 05 2023

web digital video and hd algorithms and interfaces digital video and hd charles poynton morgan kaufmann 2003 computers 692 pages rapidly evolving computer and communications

digital video and hd algorithms and interfaces google books - May 04 2023

web digital video and hd algorithms and interfaces digital video and hd charles poynton morgan kaufmann 2003 computers 692 pages rapidly evolving computer and communications

icdl exam windows v6 youtube - Apr 13 2022

web icdl v5 windows 7 icdl v5 word 2010 icdl v5 excel 2010 icdl v5 litmus icdl v5 internet icdl v5 access 2010 icdl v5 windows 7 exam icdl v5 powerpoint icdl v5

شرح ويندوز 7 الفيديو الأول icdl v5 youtube - Jul 28 2023

web شرح ويندوز 7 الفيديو الأول icdl v5 youtube الفيديو الأولي لشرح ويندوز 7 من شهادة icdl v5windows 7icdl v5 الرخصة الدولية لقيادة الحاسب الألي الاصدار 5مقدم من صفحة كورسات سوهاج برجاء

ecdl icdl اختبارات وشرح ال icdl الأصدار الخامس windows 7 office 2010 - Nov 20 2022

web ecdl icdl module 2 windows7 الأسئله المتوقعه امتحا ecdl icdl module 3 word 2010 الأسئله المتوقعه امتح ecdl icdl

Parts Manuals Perkins 403d

module 7 internet 8 outlook 2010 الأسئ ecdl icdl module 4 spreadsheets excel 2010 الأسئله امتحانات واختبارات ecdl icdl v
5 الأصدار الخامس te

icdl v5 windows 7 office2010 مذكرات جدني - Mar 12 2022
web مذكرات icdl v5 windows 7 office2010 فيما يلي صفحات متعلقة بكلمة البحث مذكرات icdl v5 windows 7 office2010 منحة
مجانية في icdl معتمدة من اليونيسكو

icdl v5 أسئلة امتحانات محلولة الوحدة الثانية **windows 7** - Sep 18 2022
web شبكة المنهل التعليمية منهاج شهادة قيادة الحاسب icdl مناهج وامتحانات icdl v5 أسئلة امتحانات محلولة الوحدة الثانية
windows 7

7 شرح ويندوز **icdl free courses academy fca blogger** - Dec 21 2022
web 7 شرح ويندوز icdl free courses academy fca الصفحة الرئيسية اختبارات icdl v5 امتحانات اون لاين امتحانات icdl v5 كتب
icdl v5 منح تعليمية icdl exam v5 icdl v5 عربي icdl v5 arabic icdl v5 pdf 7 شرح ويندوز icdl

icdl v5 2ج windows7 إمتحانات أسئلة امتحانات **icdl v5** - Aug 17 2022
web icdl v5 2ج windows7 إمتحانات icdlv5 icdl windows7 windows7 exam امتحانات icdl امنحانات windows7 امتحانات الرخصة
7 الدولية لقيادة الحاسب الآلي امتحانات ويندوز excel word powerpoint access internet شرح كامل icdl شرح icdl شهاد
شهادة الرخصة icdl اليونسكو المعتمدة شهادة

الفيديو الخامس 7 شرح ويندوز icdl v5 كورسات سوهاج - Jul 16 2022
web الفيديو الخامس 7 فيديو شرح شرح ويندوز icdl v5 ضمن كورس icdl 5 مجانى معتمد اونلاين شرح قناة كورسات سوهاج الفديو رقم
7 من شهادة الفيديو الخامس لشرح ويندوز icdl v5

icdl v 5 windows exam 7 حل امتحان على ويندوز *youtube* - Oct 19 2022
web icdl v 5 windows exam 7من كورس الرخصة الدولية لقيادة الحاسب الالي الاصدار الخامس حل امتحان على ويندوز

حل امتحانات الموديول الثاني *win 7* للحصول على *icdl v5* - Apr 25 2023
web 7 عدد 97 سؤال بإجابات مباشرة و باسلوب سهل للحصول على شهادة win حل جميع اختبارات الموديول الثاني ويندوز icdl v5

شرح **windows 7 3ج icdl v5 edumefree** - Jun 27 2023
web شرح windows 7 3ج icdl v5 windows 7 شرح windows7 icdl 2016 icdl v5 2016 كورس icdl شرح كامل using computer mand
managing files الرخصة الدولية لقيادة الحاسب الآلي تكنولوجبا المعلومات accesss power point excel word internet
information technology شرح

7 الفيديو السابع لشرح ويندوز sohag courses كورسات سوهاج facebook - May 14 2022
web 7 من شهادة الفيديو السابع لشرح ويندوز icdl v5 windows 7 icdl v5 5 مقدم الرخصة الدولية لقيادة الحاسب الألي الاصدار
من صفحة كورسات سوهاج برجاء الاشتراك في صفح

الفيديو الخامس عشر لشرح **sohag courses** كورسات سوهاج - Feb 11 2022

Parts Manuals Perkins 403d

web لكورس الـ 7 الفيديو الخامس عشر لشرح ويندوز icdl windows 7 icdl v5 الفيديو بيتناول شرح computer language binary system data size measuring unites data

شرح icdl v5 windows 7 youtube - May 26 2023

web share your videos with friends family and the world

1 حل اختبار icdl جوده عاليه 7 مديول ويندوز icdl v5 windows 7 module - Mar 24 2023

web لتحميل ملف الباور بوينت لحل الامتحان adf ly wnyewlike and share□□□□ اذا كان هناك اى استفسار

icdl v 5 free download borrow and streaming internet archive - Aug 29 2023

web icdl v 5 free download borrow and streaming internet archive there is no preview available for this item this item does not appear to have any files that can be experienced on archive org please download files in this item to

icdl v5 2ج windows7 إمتحانات youtube - Feb 23 2023

web icdl v5 2ج windows7 □□□□□□□□icdlv5icdlwindows7windows7 exam امتحانات icdl امنحانات windows7 الرخصة □□□□□□□ الدولية لقيادة الحاسب

شرح **windows 7 2ج icdl v5 elebda3 com** - Jun 15 2022

web شرح windows 7 2ج icdl v5 كورس icdl شرح كامل using computer mand managing files الرخصة الدولية لقيادة الحاسب الآلي تكنولوجبا المعلومات accesss power point excel word internet information technology شرح كامل لكورس icdl5 الاصدار الخامس للرخصة الدولية لقيادة الحاسب الآلي

icdl v5 1ج windows7 إمتحانات youtube - Sep 30 2023

web icdl v5 1□ windows7 إمتحاناتشرح كورس الرخصة الدولية لقيادة الحاسب الاليامتحانات windows7

شرح شرح **windows 7 2□ icdl v5** معتمد منصة معارف - Jan 22 2023

web كورس icdl كامل للمبتدئين شرح عربى تعليم و تدريب دورة تدريبية شرح windows 7 2□ icdl v5 شهادات معتمدة مجانية