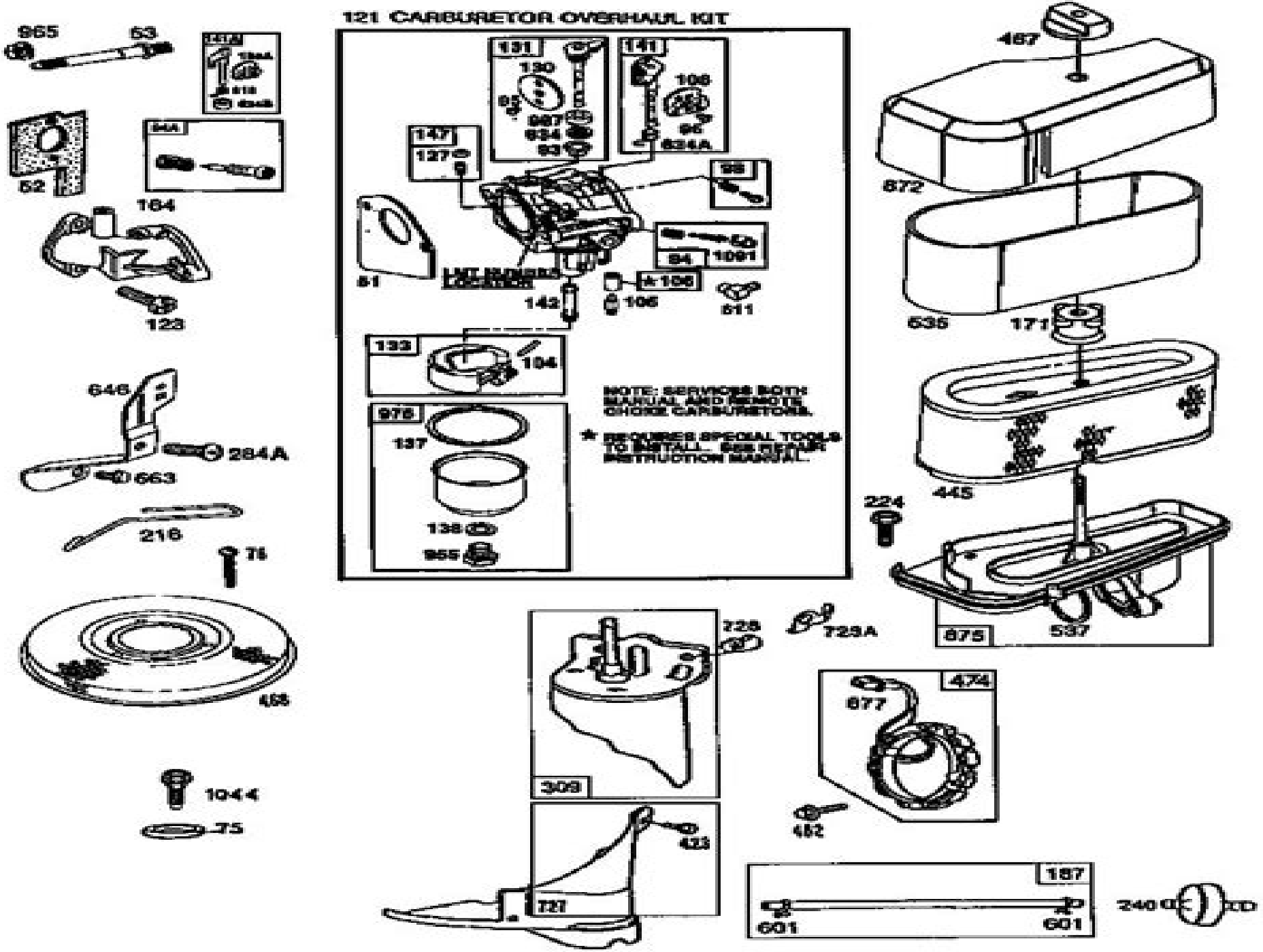
121 CARBURETOR OVERHAUL KIT
NOTE: SERVICES BOTH MANUAL AND REMOTE CHOKE CARBURETORS.
★ REQUIRES SPECIAL TOOLS TO INSTALL. SEE REPAIR INSTRUCTION MANUAL.
965
53
52
164
123
646
284A
663
216
75
468
1044
75
131
130
95
987
934
93
141
106
96
934A
147
127
98
51
LIMIT NUMBER LOCATION
142
84
1091
★106
106
511
133
104
976
137
138
955
467
872
535
171
445
224
875
537
728
729A
309
474
677
482
423
727
187
601
601
240

Misc Engines Economy Model Xk 1 12 2 12 3 12hp Pts Operators Manual

F Rizvi

Misc Engines Economy Model Xk 1 12 2 12 3 12hp Pts Operators Manual:

Thank you totally much for downloading **Misc Engines Economy Model Xk 1 12 2 12 3 12hp Pts Operators Manual**.Most likely you have knowledge that, people have see numerous times for their favorite books next this Misc Engines Economy Model Xk 1 12 2 12 3 12hp Pts Operators Manual, but end happening in harmful downloads.

Rather than enjoying a good book following a cup of coffee in the afternoon, otherwise they juggled like some harmful virus inside their computer. **Misc Engines Economy Model Xk 1 12 2 12 3 12hp Pts Operators Manual** is simple in our digital library an online access to it is set as public as a result you can download it instantly. Our digital library saves in multipart countries, allowing you to acquire the most less latency period to download any of our books with this one. Merely said, the Misc Engines Economy Model Xk 1 12 2 12 3 12hp Pts Operators Manual is universally compatible next any devices to read.

https://correiodobrasil.blogoosfero.cc/data/book-search/default.aspx/paradox_security_user_guide.pdf

Table of Contents Misc Engines Economy Model Xk 1 12 2 12 3 12hp Pts Operators Manual

1. Understanding the eBook Misc Engines Economy Model Xk 1 12 2 12 3 12hp Pts Operators Manual
    - The Rise of Digital Reading Misc Engines Economy Model Xk 1 12 2 12 3 12hp Pts Operators Manual
    - Advantages of eBooks Over Traditional Books
2. Identifying Misc Engines Economy Model Xk 1 12 2 12 3 12hp Pts Operators Manual
    - Exploring Different Genres
    - Considering Fiction vs. Non-Fiction
    - Determining Your Reading Goals
3. Choosing the Right eBook Platform
    - Popular eBook Platforms
    - Features to Look for in an Misc Engines Economy Model Xk 1 12 2 12 3 12hp Pts Operators Manual
    - User-Friendly Interface
4. Exploring eBook Recommendations from Misc Engines Economy Model Xk 1 12 2 12 3 12hp Pts Operators Manual
    - Personalized Recommendations

- Misc Engines Economy Model Xk 1 12 2 12 3 12hp Pts Operators Manual User Reviews and Ratings
- Misc Engines Economy Model Xk 1 12 2 12 3 12hp Pts Operators Manual and Bestseller Lists

5. Accessing Misc Engines Economy Model Xk 1 12 2 12 3 12hp Pts Operators Manual Free and Paid eBooks
   - Misc Engines Economy Model Xk 1 12 2 12 3 12hp Pts Operators Manual Public Domain eBooks
   - Misc Engines Economy Model Xk 1 12 2 12 3 12hp Pts Operators Manual eBook Subscription Services
   - Misc Engines Economy Model Xk 1 12 2 12 3 12hp Pts Operators Manual Budget-Friendly Options
6. Navigating Misc Engines Economy Model Xk 1 12 2 12 3 12hp Pts Operators Manual eBook Formats
   - ePub, PDF, MOBI, and More
   - Misc Engines Economy Model Xk 1 12 2 12 3 12hp Pts Operators Manual Compatibility with Devices
   - Misc Engines Economy Model Xk 1 12 2 12 3 12hp Pts Operators Manual Enhanced eBook Features
7. Enhancing Your Reading Experience
   - Adjustable Fonts and Text Sizes of Misc Engines Economy Model Xk 1 12 2 12 3 12hp Pts Operators Manual
   - Highlighting and Note-Taking Misc Engines Economy Model Xk 1 12 2 12 3 12hp Pts Operators Manual
   - Interactive Elements Misc Engines Economy Model Xk 1 12 2 12 3 12hp Pts Operators Manual
8. Staying Engaged with Misc Engines Economy Model Xk 1 12 2 12 3 12hp Pts Operators Manual
   - Joining Online Reading Communities
   - Participating in Virtual Book Clubs
   - Following Authors and Publishers Misc Engines Economy Model Xk 1 12 2 12 3 12hp Pts Operators Manual
9. Balancing eBooks and Physical Books Misc Engines Economy Model Xk 1 12 2 12 3 12hp Pts Operators Manual
   - Benefits of a Digital Library
   - Creating a Diverse Reading Collection Misc Engines Economy Model Xk 1 12 2 12 3 12hp Pts Operators Manual
10. Overcoming Reading Challenges
    - Dealing with Digital Eye Strain
    - Minimizing Distractions
    - Managing Screen Time
11. Cultivating a Reading Routine Misc Engines Economy Model Xk 1 12 2 12 3 12hp Pts Operators Manual
    - Setting Reading Goals Misc Engines Economy Model Xk 1 12 2 12 3 12hp Pts Operators Manual
    - Carving Out Dedicated Reading Time
12. Sourcing Reliable Information of Misc Engines Economy Model Xk 1 12 2 12 3 12hp Pts Operators Manual
    - Fact-Checking eBook Content of Misc Engines Economy Model Xk 1 12 2 12 3 12hp Pts Operators Manual

- Distinguishing Credible Sources

13. Promoting Lifelong Learning
    - Utilizing eBooks for Skill Development
    - Exploring Educational eBooks
14. Embracing eBook Trends
    - Integration of Multimedia Elements
    - Interactive and Gamified eBooks

Misc Engines Economy Model Xk 1 12 2 12 3 12hp Pts Operators Manual Introduction

In the digital age, access to information has become easier than ever before. The ability to download Misc Engines Economy Model Xk 1 12 2 12 3 12hp Pts Operators Manual has revolutionized the way we consume written content. Whether you are a student looking for course material, an avid reader searching for your next favorite book, or a professional seeking research papers, the option to download Misc Engines Economy Model Xk 1 12 2 12 3 12hp Pts Operators Manual has opened up a world of possibilities. Downloading Misc Engines Economy Model Xk 1 12 2 12 3 12hp Pts Operators Manual provides numerous advantages over physical copies of books and documents. Firstly, it is incredibly convenient. Gone are the days of carrying around heavy textbooks or bulky folders filled with papers. With the click of a button, you can gain immediate access to valuable resources on any device. This convenience allows for efficient studying, researching, and reading on the go. Moreover, the cost-effective nature of downloading Misc Engines Economy Model Xk 1 12 2 12 3 12hp Pts Operators Manual has democratized knowledge. Traditional books and academic journals can be expensive, making it difficult for individuals with limited financial resources to access information. By offering free PDF downloads, publishers and authors are enabling a wider audience to benefit from their work. This inclusivity promotes equal opportunities for learning and personal growth. There are numerous websites and platforms where individuals can download Misc Engines Economy Model Xk 1 12 2 12 3 12hp Pts Operators Manual. These websites range from academic databases offering research papers and journals to online libraries with an expansive collection of books from various genres. Many authors and publishers also upload their work to specific websites, granting readers access to their content without any charge. These platforms not only provide access to existing literature but also serve as an excellent platform for undiscovered authors to share their work with the world. However, it is essential to be cautious while downloading Misc Engines Economy Model Xk 1 12 2 12 3 12hp Pts Operators Manual. Some websites may offer pirated or illegally obtained copies of copyrighted material. Engaging in such activities not only violates copyright laws but also undermines the efforts of authors, publishers, and researchers. To ensure ethical downloading, it is advisable to utilize reputable websites that prioritize the legal distribution of content. When

downloading Misc Engines Economy Model Xk 1 12 2 12 3 12hp Pts Operators Manual, users should also consider the potential security risks associated with online platforms. Malicious actors may exploit vulnerabilities in unprotected websites to distribute malware or steal personal information. To protect themselves, individuals should ensure their devices have reliable antivirus software installed and validate the legitimacy of the websites they are downloading from. In conclusion, the ability to download Misc Engines Economy Model Xk 1 12 2 12 3 12hp Pts Operators Manual has transformed the way we access information. With the convenience, cost-effectiveness, and accessibility it offers, free PDF downloads have become a popular choice for students, researchers, and book lovers worldwide. However, it is crucial to engage in ethical downloading practices and prioritize personal security when utilizing online platforms. By doing so, individuals can make the most of the vast array of free PDF resources available and embark on a journey of continuous learning and intellectual growth.

FAQs About Misc Engines Economy Model Xk 1 12 2 12 3 12hp Pts Operators Manual Books

How do I know which eBook platform is the best for me? Finding the best eBook platform depends on your reading preferences and device compatibility. Research different platforms, read user reviews, and explore their features before making a choice. Are free eBooks of good quality? Yes, many reputable platforms offer high-quality free eBooks, including classics and public domain works. However, make sure to verify the source to ensure the eBook credibility. Can I read eBooks without an eReader? Absolutely! Most eBook platforms offer webbased readers or mobile apps that allow you to read eBooks on your computer, tablet, or smartphone. How do I avoid digital eye strain while reading eBooks? To prevent digital eye strain, take regular breaks, adjust the font size and background color, and ensure proper lighting while reading eBooks. What the advantage of interactive eBooks? Interactive eBooks incorporate multimedia elements, quizzes, and activities, enhancing the reader engagement and providing a more immersive learning experience. Misc Engines Economy Model Xk 1 12 2 12 3 12hp Pts Operators Manual is one of the best book in our library for free trial. We provide copy of Misc Engines Economy Model Xk 1 12 2 12 3 12hp Pts Operators Manual in digital format, so the resources that you find are reliable. There are also many Ebooks of related with Misc Engines Economy Model Xk 1 12 2 12 3 12hp Pts Operators Manual. Where to download Misc Engines Economy Model Xk 1 12 2 12 3 12hp Pts Operators Manual online for free? Are you looking for Misc Engines Economy Model Xk 1 12 2 12 3 12hp Pts Operators Manual PDF? This is definitely going to save you time and cash in something you should think about. If you trying to find then search around for online. Without a doubt there are numerous these available and many of them have the freedom. However without doubt you receive whatever you purchase. An alternate way to get ideas is always to check another Misc Engines Economy Model Xk 1 12 2 12 3 12hp Pts Operators Manual. This method for see exactly what may be included and adopt these ideas to your book. This site will almost certainly

help you save time and effort, money and stress. If you are looking for free books then you really should consider finding to assist you try this. Several of Misc Engines Economy Model Xk 1 12 2 12 3 12hp Pts Operators Manual are for sale to free while some are payable. If you arent sure if the books you would like to download works with for usage along with your computer, it is possible to download free trials. The free guides make it easy for someone to free access online library for download books to your device. You can get free download on free trial for lots of books categories. Our library is the biggest of these that have literally hundreds of thousands of different products categories represented. You will also see that there are specific sites catered to different product types or categories, brands or niches related with Misc Engines Economy Model Xk 1 12 2 12 3 12hp Pts Operators Manual. So depending on what exactly you are searching, you will be able to choose e books to suit your own need. Need to access completely for Campbell Biology Seventh Edition book? Access Ebook without any digging. And by having access to our ebook online or by storing it on your computer, you have convenient answers with Misc Engines Economy Model Xk 1 12 2 12 3 12hp Pts Operators Manual To get started finding Misc Engines Economy Model Xk 1 12 2 12 3 12hp Pts Operators Manual, you are right to find our website which has a comprehensive collection of books online. Our library is the biggest of these that have literally hundreds of thousands of different products represented. You will also see that there are specific sites catered to different categories or niches related with Misc Engines Economy Model Xk 1 12 2 12 3 12hp Pts Operators Manual So depending on what exactly you are searching, you will be able tochoose ebook to suit your own need. Thank you for reading Misc Engines Economy Model Xk 1 12 2 12 3 12hp Pts Operators Manual. Maybe you have knowledge that, people have search numerous times for their favorite readings like this Misc Engines Economy Model Xk 1 12 2 12 3 12hp Pts Operators Manual, but end up in harmful downloads. Rather than reading a good book with a cup of coffee in the afternoon, instead they juggled with some harmful bugs inside their laptop. Misc Engines Economy Model Xk 1 12 2 12 3 12hp Pts Operators Manual is available in our book collection an online access to it is set as public so you can download it instantly. Our digital library spans in multiple locations, allowing you to get the most less latency time to download any of our books like this one. Merely said, Misc Engines Economy Model Xk 1 12 2 12 3 12hp Pts Operators Manual is universally compatible with any devices to read.

Find Misc Engines Economy Model Xk 1 12 2 12 3 12hp Pts Operators Manual :

paradox security user guide
panasonic tv user guide manual
~~pandigital novel user manual~~
parerga and paralipomena a collection of philosophical essays
papageien loro parque wandkalender 2016

paper 2 maths grade 10 exam
parables the arrows of god
parsons daughter the cultured handmaiden and the black velvet gown
partner chainsaw manual
paris friday may 271983
paranormal traveller book 1 a taste of pleasure
panasonic tx l37g10b service manual
parrot minikit manual
panasonic th 37pv7 tx37px7 th42pv7 th42px7 tv service manual
papa erkl r geldgeschichten reich machen

Misc Engines Economy Model Xk 1 12 2 12 3 12hp Pts Operators Manual :

pdf knowledge based decision support system - Jun 22 2023
web chapter 2 decision support systems the chapter is meant to familiarize the reader with the general notions concerning a well defined class of information systems namely the
knowledge based decision support systems techniques and - May 09 2022
web mar 28 2017 this chapter has presented a decision support system driven by a robust knowledge management framework to aid the respondent sales marketing agent of
chapter 2 decision support systems springer - May 21 2023
web jun 10 2014 abstract knowledge based decision support systems kbdss have evolved greatly over the last few decades the key technologies underpinning the
decision support systems based on knowledge management - Mar 07 2022
web feb 23 2023 this study offers a merging decision making support framework that combines a knowledge based system with a learning based approach to give and
knowledge based decision support system springerlink - Jan 17 2023
web aug 1 2020 decision support systems dsss are computer programs that by using expert knowledge simulation models and or databases are of assistance in the
handbook on decision support systems 2 dandelon com - Apr 08 2022
web jul 23 2018 however knowledge and km activities are key components in how the manager uses the system i e the direction of the analysis that he carries out and the

non knowledge based decision support system springerlink - Jan 05 2022
web decision support systems getting the books chapter 2 knowledge based decision support systems now is not type of challenging means you could not by yourself going
decision support system and knowledge based strategic - Jul 11 2022
web jan 1 2000 i overview of knowledge based systems a knowledge based expert systems artificial intelligence ai is a term that includes many subdisciplines
from data and models to decision support systems lessons - Sep 13 2022
web dec 31 2015 decision support systems dss are popular tools that assist decision making in an organisation the importance of knowledge management km is also
chapter 2 knowledge based decision support systems - Aug 24 2023
web 2 2 decision support systems dss and knowledge based decision support systems kb dss decision support is a context free expression it means different
intelligent expert decision support systems methodologies - Dec 04 2021
web cdsss can be classified into two types of systems knowledge based support systems that are defined by a well established set of rules that guide decisions based on the
sustainable knowledge based decision support systems - Dec 16 2022
web jan 1 2015 open access decision support systems dss are popular tools that assist decision making in an organisation the importance of knowledge management km
handbook on decision support systems 1 dandelon com - Aug 12 2022
web may 5 2015 the last chapter evaluating decision support system projects reviews and discusses the tools and issues associated with assessing proposals for dss
introduction to decision support systems springerlink - Nov 15 2022
web aug 10 2021 model based decision support systems dsss employ various types of models such as statistical optimization simulation or rule based models are used to
decision support systems knowledge management tools - Feb 06 2022
web intelligent expert decision support systems methodologies applications and challenges 10 4018 978 1 7998 9023 2 ch024 in this chapter the authors present
decision support system and knowledge based strategic - Oct 14 2022
web part i foundations of decision support systems chapter 1 the decision making process in a complex situation 3 alex bennet and david bennet chapter 2

pdf knowledge based decision support systems a - Apr 20 2023
web knowledge based decision support systems kbdss have evolved greatly over the last few decades the key technologies underpinning the development of kbdss can be
knowledge based decision support system kbdss - Jul 23 2023
web nov 14 2015 pdf on nov 14 2015 kyungyong chung and others published knowledge based decision support system find read and cite all the research you need on
clinical decision support system an overview sciencedirect - Oct 02 2021

decision support systems concepts and resources for managers - Jun 10 2022
web chapter 14 spreadsheet based decision support systems 277 michelle m h seref and ravindra k ahuja chapter 15 multi criteria decision support 299 david l
chapter 2 knowledge based decision support systems - Nov 03 2021

pdf decision support systems researchgate - Feb 18 2023
web aug 14 2017 1 sustainable knowledge based decision support systems dss perspectives new challenges and recent advance 1 1 evolution of decision making and
knowledge based decision support systems a survey - Mar 19 2023
web nov 14 2015 this special issue covers some of the hottest topics in knowledge based decision support systems including decision support for convergence knowledge
embedded c programming and the microchip pic searchworks - Jan 14 2023
web amazon in buy embedded c programming the microchip pic book online at best prices in india on amazon in read embedded c programming the microchip pic
embedded c programming the microchip pic amazon in - Nov 12 2022
web nov 3 2003 this new book is carefully designed to teach c language programming as it applies to embedded microcontrollers and to fuel knowledge in the application of the
embedded c programming and the microchip pic guide books - Dec 13 2022
web this new book is carefully designed to teach c language programming as it applies to embedded microcontrollers and to fuel knowledge in the application of the microchip
getting started with embedded c programming part 1 - Mar 16 2023
web cdrom source nielsen book data publisher s summary this new book is carefully designed to teach c language

programming as it applies to embedded microcontrollers

pic microcontroller architecture and embedded c programming - Aug 09 2022

web interfacing pic microcontrollers embedded design by interactive simulation programming 8 bit pic microcontrollers in c with interactive hardware simulation it

amazon com customer reviews embedded c programming and - Oct 31 2021

step by step procedure for pic microcontroller programming - Jun 07 2022

web embedded c programming and the microchip pic embedded c programming and the microchip pic previous next abstract no abstract available cited by view all

embedded c programming and the microchip pic paperback - Sep 10 2022

web program the pic microcontroller the pic microcontroller programming is performed through mp lab software first instal the mp lab software then select and install the

mplab xc8 user s guide for embedded engineers - Feb 15 2023

web nov 1 2003 embedded c programming and the microchip pic guide books acm digital library

embedded systems pic programming wikibooks - Dec 01 2021

introduction to the microchip pic c programming - Apr 05 2022

web nov 28 2018 embedded systems pic programming embedded systems this module assumes you the reader know a little about programming using c and

embedded c programming and the microchip pic google books - Apr 17 2023

web aug 15 2018 mplab xc8 user s guide for embedded engineers pic mcus this document presents five code examples for 8 bit pic mcu devices and the mplab xc8

an introduction to programming the microchip pic in - Jul 08 2022

web jul 22 2017 to start c programming language on microchip pic microcontroller you need these following tools down load the latest microchip mplab ide which provide

embedded c programming and the microchip pic - Jul 20 2023

web this class provides an introduction to the c programming language as specified by the ansi c89 standard in the context of embedded systems we cover the c language

foreword university of washington - May 06 2022

web this course covers many advanced concepts of the c programming language for embedded applications june 2021 206

min c programming linked list data
all courses microchip technology - Feb 03 2022

fundamentals of the c programming language developer help - Jun 19 2023
web since the most widely used high level programming language for pic microcontrollers is c this document will focus on c programming to ensure compatibility with most pic c
microchip pic micros and c source and sample code - Jan 02 2022

embedded c programming and the microchip pic guide books - Mar 04 2022
web embedded c programming and the microchip pic how customer reviews and ratings work philippe habib a rare tutorial for using c on the pic read more 9 people found
pic1000 getting started with writing c code for pic16 and pic18 - May 18 2023
web embedded c programming and the microchip pic richard h barnett larry o cull sarah alison cox 2004 c computer program language 497 pages this new
embedded c programming and the microchip pic pdf - Aug 21 2023
web this new book is carefully designed to teach c language programming as it applies to embedded microcontrollers and to fuel knowledge in the application of the microchip
embedded c programming and the microchip pic paperback - Oct 11 2022
web pic microcontroller architecture and embedded c programming 4 2 32 ratings 189 students what you ll learn students will learn architecture and programming of pic
confidential motoman instructions motoman - Jan 24 2023
web the motoman is the yaskawa industrial robot product the motoman usually consists of the manipulator the controller the programming pendant and supply cables
motoman xrc instruction manual motoman sv3x - Jun 16 2022
web a subsidiary of yaskawa electric corporation motoman xrc instruction manual motoman sv3x sv3xl upon receipt of the product and prior to initial operation read these instructions thoroughly and retain for future reference manual no mrs52050
yaskawa motoman series instructions manual pdf - Nov 21 2022
web yaskawa motoman series instructions manual for arc welding diagnosis function also see for motoman series instructions manual 60 pages instructions for safe operation 11 pages instructions manual 40 pages 1 2 3 4 5 6 7 table of contents 8 9 10 11 12 13 14 15 16 17 18 19 20 21 22 23 24

robotics training courses yaskawa academy robotics training motoman - May 28 2023
web yaskawa academy offers over 75 different robotics training courses including basic programming advanced programming maintenance concurrent i o purchasable options and customized training these courses are given at various locations including online topics delivered through our lms or yours

yaskawa motoman gp50 maintenance manual pdf download manualslib - Jul 18 2022
web yaskawa motoman gp50 maintenance manual also see for motoman gp50 operating and maintenance manual 86 pages 1 table of contents 2 3 4 5 6 7 8 9 10 11 12 13 14 15 16 17 18 19 20 21 22 23 24 25 26 27 28 29

how to get started with yaskawa robot programming - Feb 22 2023
web jun 28 2021 there are a few different ways that you can program a yaskawa motoman robot a quick intro to yaskawa motoman robots yaskawa is a japan based manufacturer of industrial automation components their robotic line is called motoman and it includes many types of robots including 6 dof industrial arms scara robots and

motoman robot controller manuals - Oct 01 2023
web user and maintenance manuals for yaskawa robots software and equipment terms of use and copyright notice these manuals are freely available as a service to yaskawa customers to assist in the operation of motoman robots related equipment and software

stem robotics education yaskawa motoman robotics training - Dec 23 2022
web apr 10 2023 online stem robotics learning web based lms provides best in class stem robotics education this comprehensive stem aligned curriculum will provide your students with the academic core standards and 21st century skills required for careers in advanced manufacturing

online robotics courses yaskawa academy robotics training motoman - Apr 26 2023
web yaskawa safety principles at yaskawa we take safety very seriously this course introduces some of our fundamental concepts when working around robots access online training yaskawa academy offers several robotics training courses for free online including an intro to robotics course

instructions george washington university - Sep 19 2022
web this manual is freely available as a service to yaskawa customers to assist in the operation of motoman robots related equipment and software this manual is copyrighted property of yaskawa and may not be sold or redistributed in any way

robot training courses find a class near you yaskawa academy motoman - May 16 2022
web yaskawa motoman offers standard modified and customized robotics training courses at several locations throughout the americas reserve your spot today

yaskawa motoman yrc1000 instructions manual pdf - Jul 30 2023

web view and download yaskawa motoman yrc1000 instructions manual online robot controller motoman yrc1000 robotics pdf manual download

yaskawa robotics user manuals download manualslib - Oct 21 2022

web download 93 yaskawa robotics pdf manuals user manuals yaskawa robotics operating guides and service manuals

yrc1000 basic programming yaskawa academy usa motoman - Aug 31 2023

web yrc1000 basic programming this course is an introduction to programming the yrc1000 controller no prior knowledge of robot programming or the yrc1000 controller is required note all yrc1000 training classes will be taught using the standard programming pendant only

yaskawa motoman mh series manual pdf download manualslib - Mar 14 2022

web view and download yaskawa motoman mh series manual online with motomount and drive assemblies motoman mh series valve positioners pdf manual download also for motoman mh150 motoman mh450 motoman mh75 motoman mh1500

yaskawa motoman nx100 manual pdf download manualslib - Aug 19 2022

web yaskawa motoman nx100 manual pdf download manualslib manuals brands yaskawa manuals controller motoman nx100 manual yaskawa motoman nx100 manual also see for motoman nx100 operator s manual 493 pages manual 405 pages instructions manual 308 pages 1 2 3 4 5 6 7 8 9 10 11 12 13 14 15 16 17 18 19

yaskawa self guided training youtube - Feb 10 2022

web mar 15 2018 learn about what yaskawa self guided training is and how it works find out more at training yaskawa com catalog token eyjhbgcioijiuzi1niisinr5cci6ikp

yaskawa motoman dx100 manuals manualslib - Mar 26 2023

web yaskawa motoman dx100 manuals manuals and user guides for yaskawa motoman dx100 we have 21 yaskawa motoman dx100 manuals available for free pdf download maintenance manual operator s manual instructions manual instruction manual yaskawa motoman dx100 operator s manual 554 pages

training yaskawa - Apr 14 2022

web courses provide classroom instruction combined with hands on training at yaskawa motoman headquarters in miamisburg ohio and at our additional remote facilities view classes on motoman com elearning curriculum elearning curriculum

robotics how to videos robot training videos motoman - Jun 28 2023

web yaskawa motoman offers helpful how to videos for its robotic systems including common functions commands and troubleshooting demonstrations for controllers